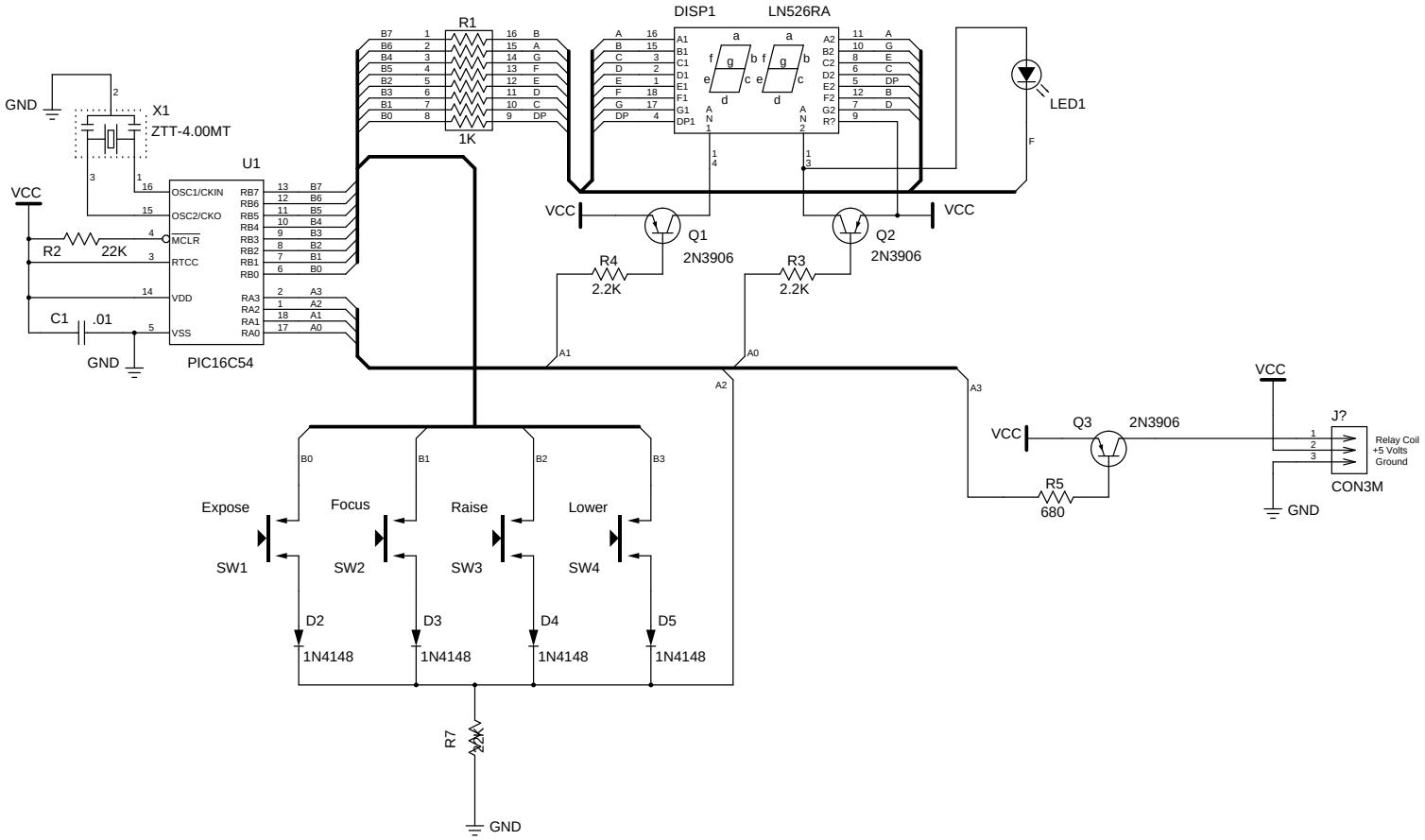


| | | |
|---|---|---|
| Title | TIMER MAIN CIRCUIT BOARD | |
| Size B | Number | Rev C |
| Date 05Apr2010 | | Drawn by NOL |
| Filename timermai | | Sheet 1 of 1 |